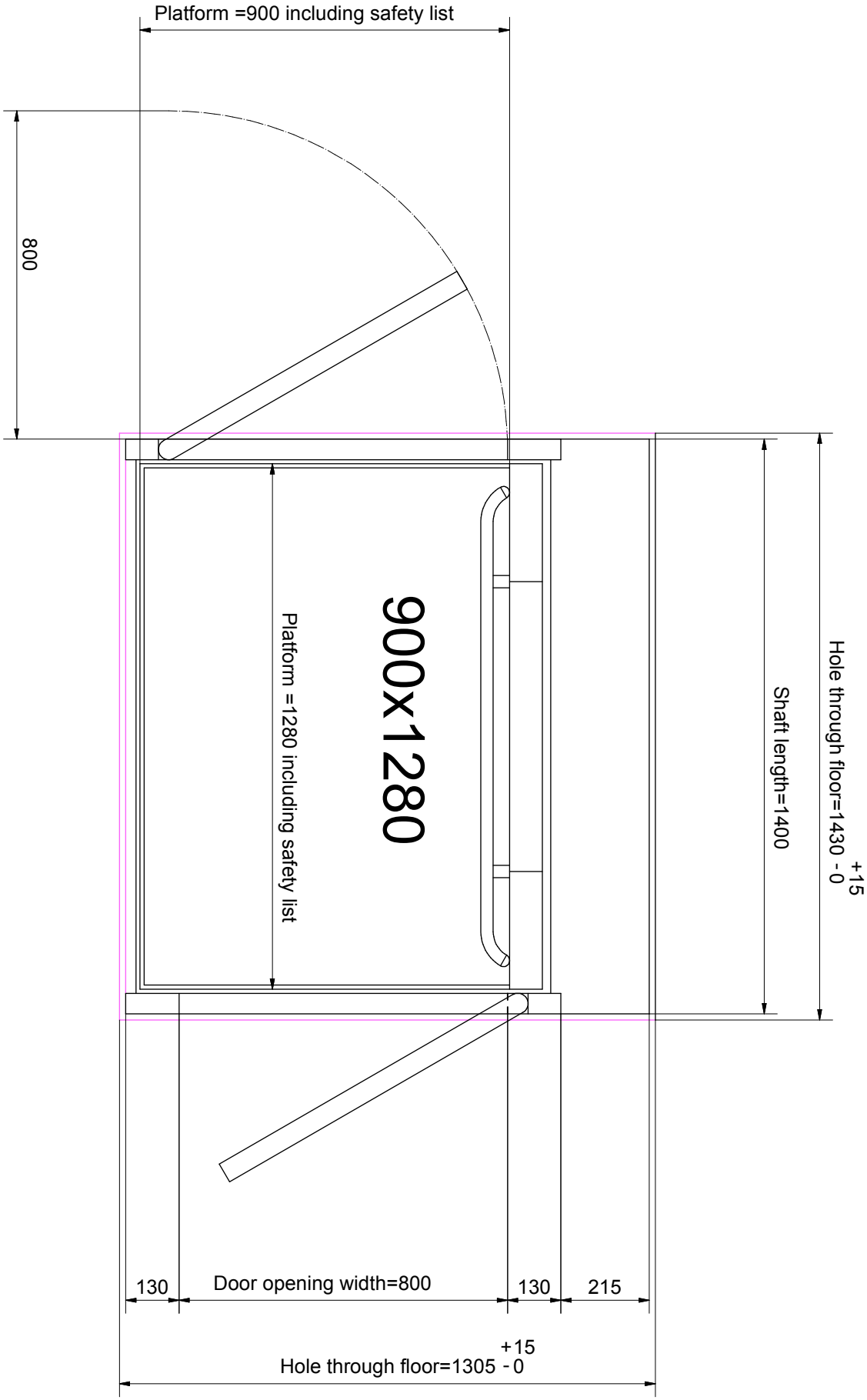
Hole through floor=1430 +15 - 0
Shaft length=1400
900x1280
Platform =1280 including safety list
Platform =900 including safety list
800
130
Door opening width=800
130
215
Hole through floor=1305 +15 - 0

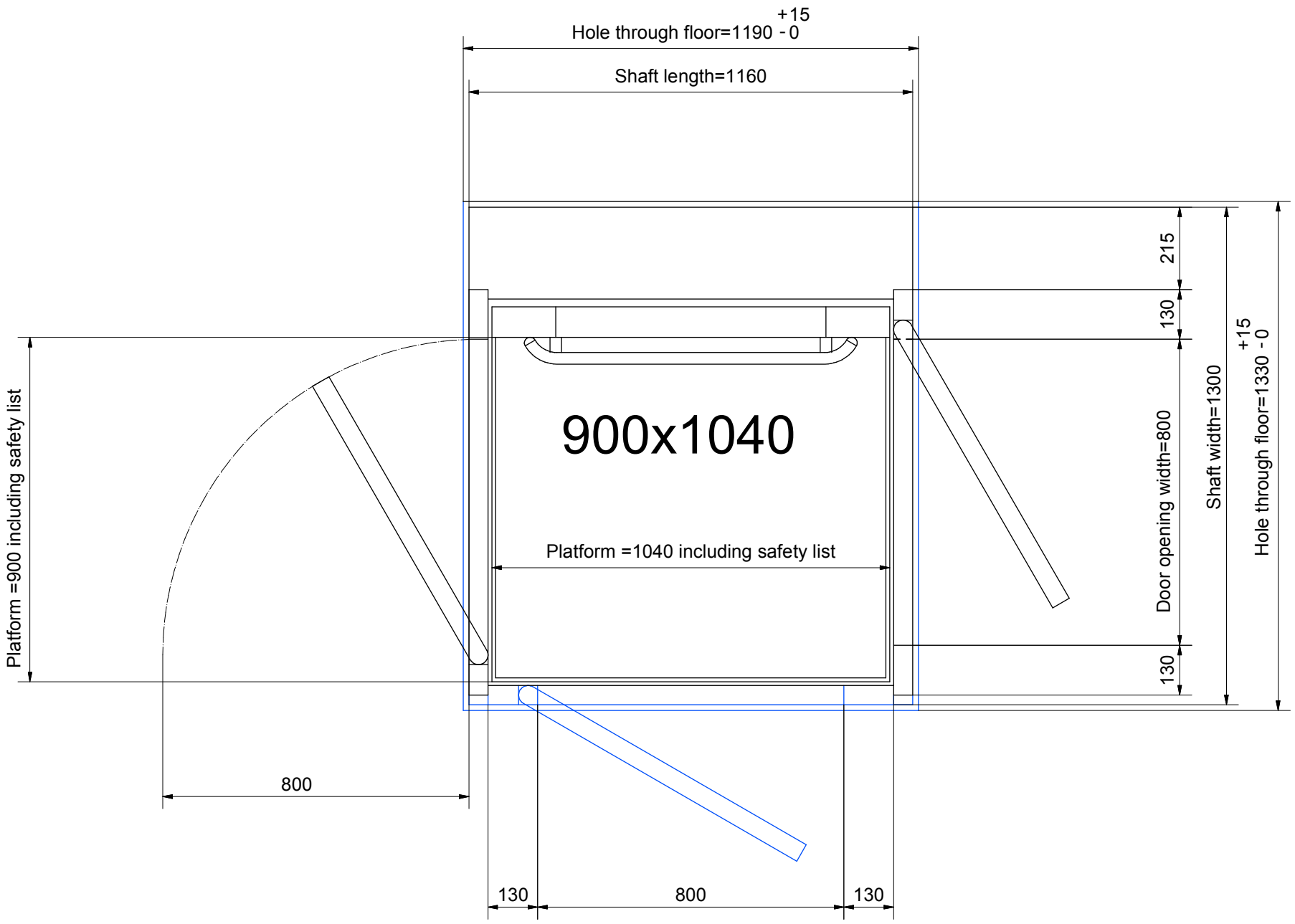
Hole through floor=1190 +15 - 0
Shaft length=1160
900x1040
Platform =1040 including safety list
Platform =900 including safety list
215
130
Door opening width=800
130
Shaft width=1300
Hole through floor=1330 +15 - 0
800
130
800
130

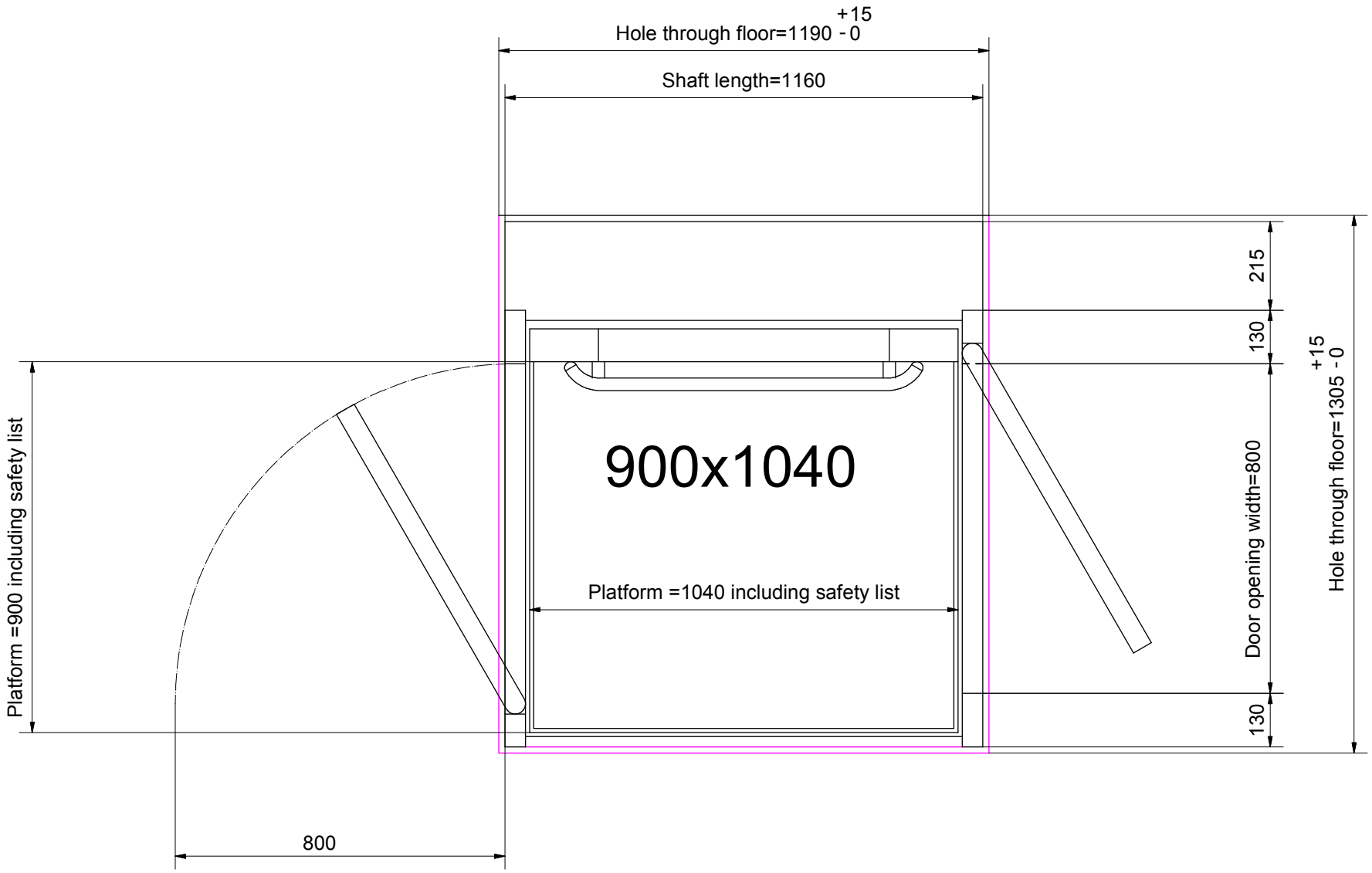
Hole through floor=1190 +15 -0
Shaft length=1160
215
130
Hole through floor=1305 +15 -0
900x1040
Platform =900 including safety list
Platform =1040 including safety list
Door opening width=800
130
800

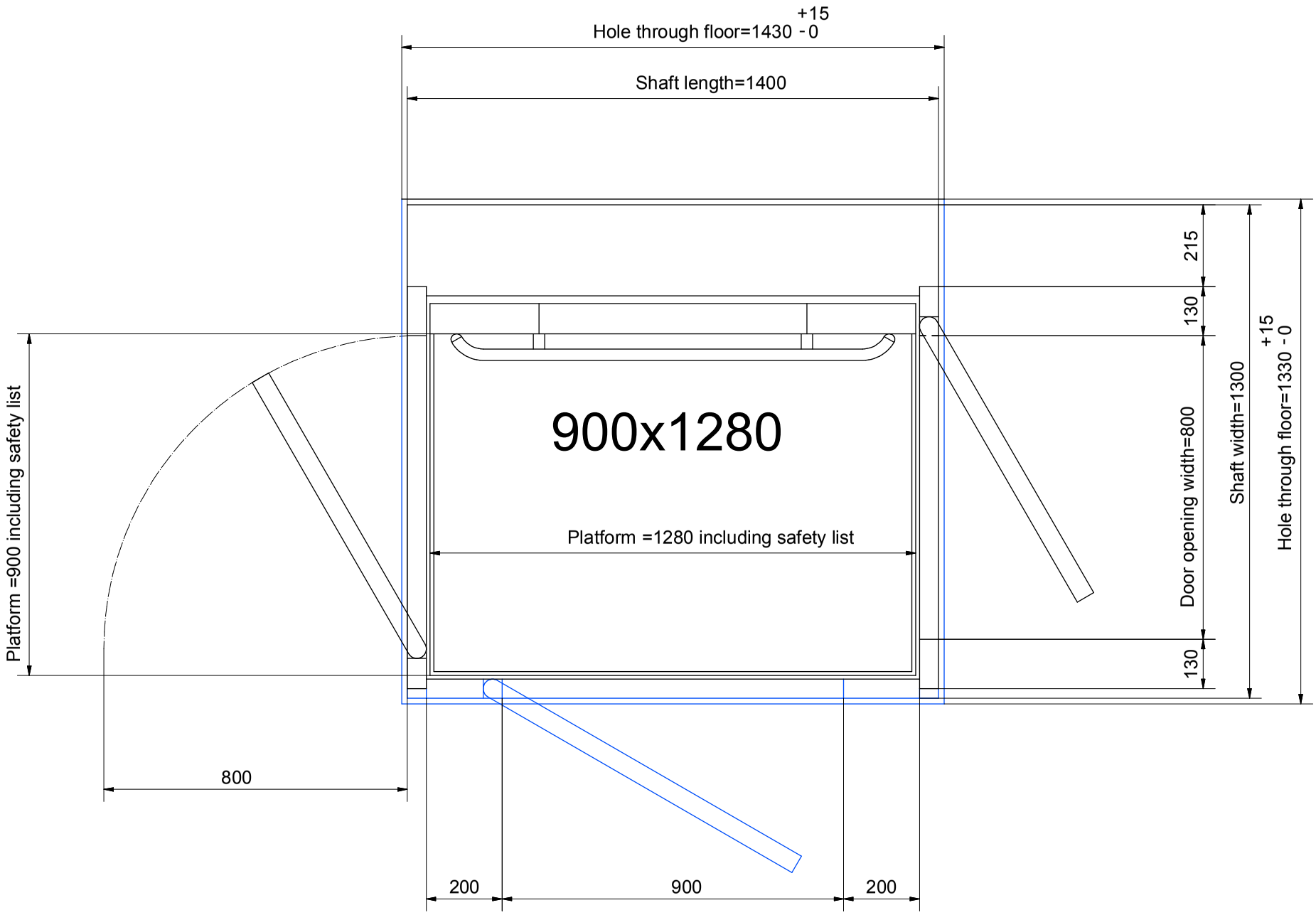
Hole through floor=1430 +15 - 0
Shaft length=1400
900x1280
Platform =1280 including safety list
Platform =900 including safety list
800
200
900
200
215
130
Door opening width=800
130
Shaft width=1300
Hole through floor=1330 +15 - 0

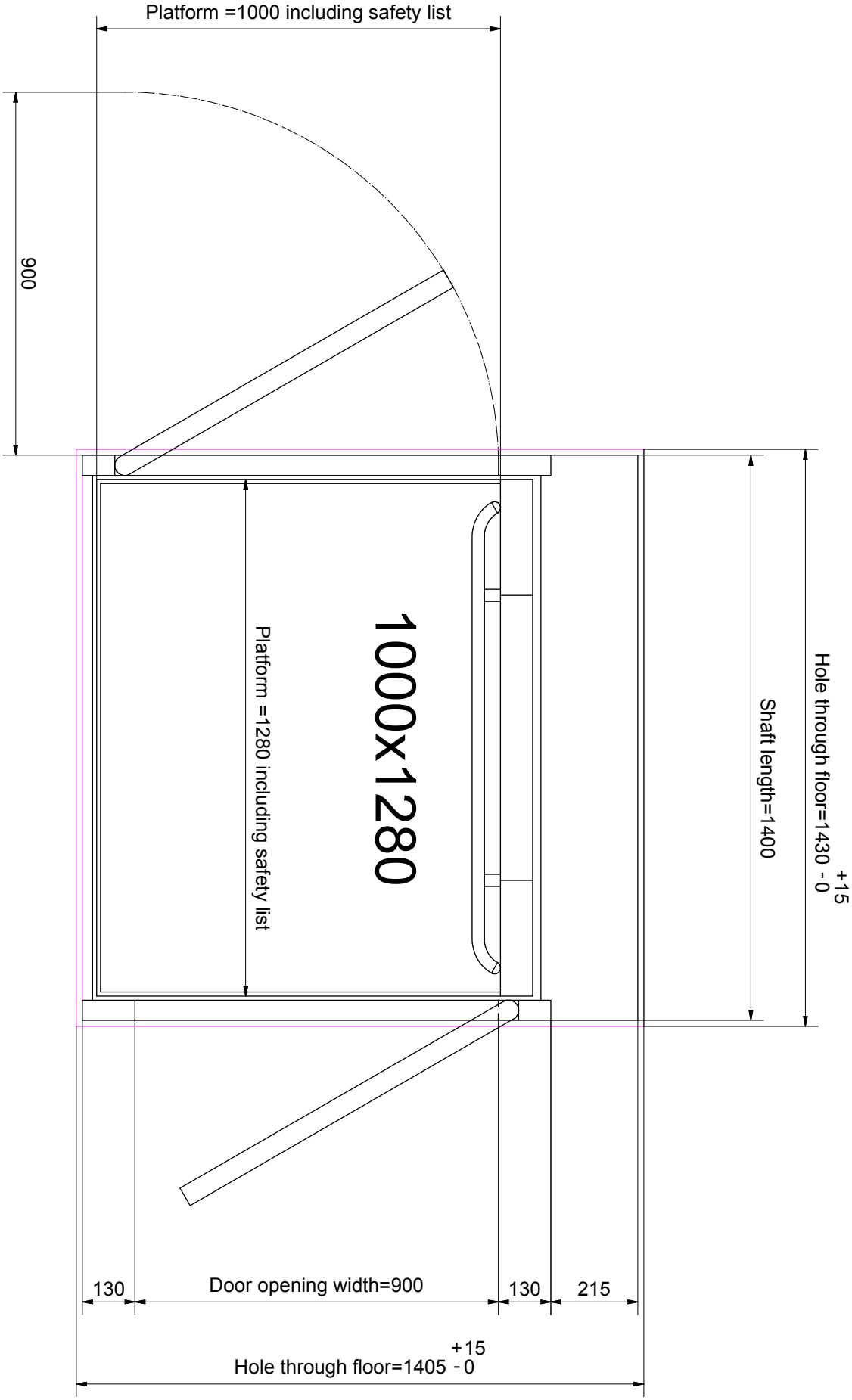
Hole through floor=1430 +15 - 0
Shaft length=1400
1000x1280
Platform =1280 including safety list
Platform =1000 including safety list
900
215
130
Door opening width=900
130
Hole through floor=1405 +15 - 0

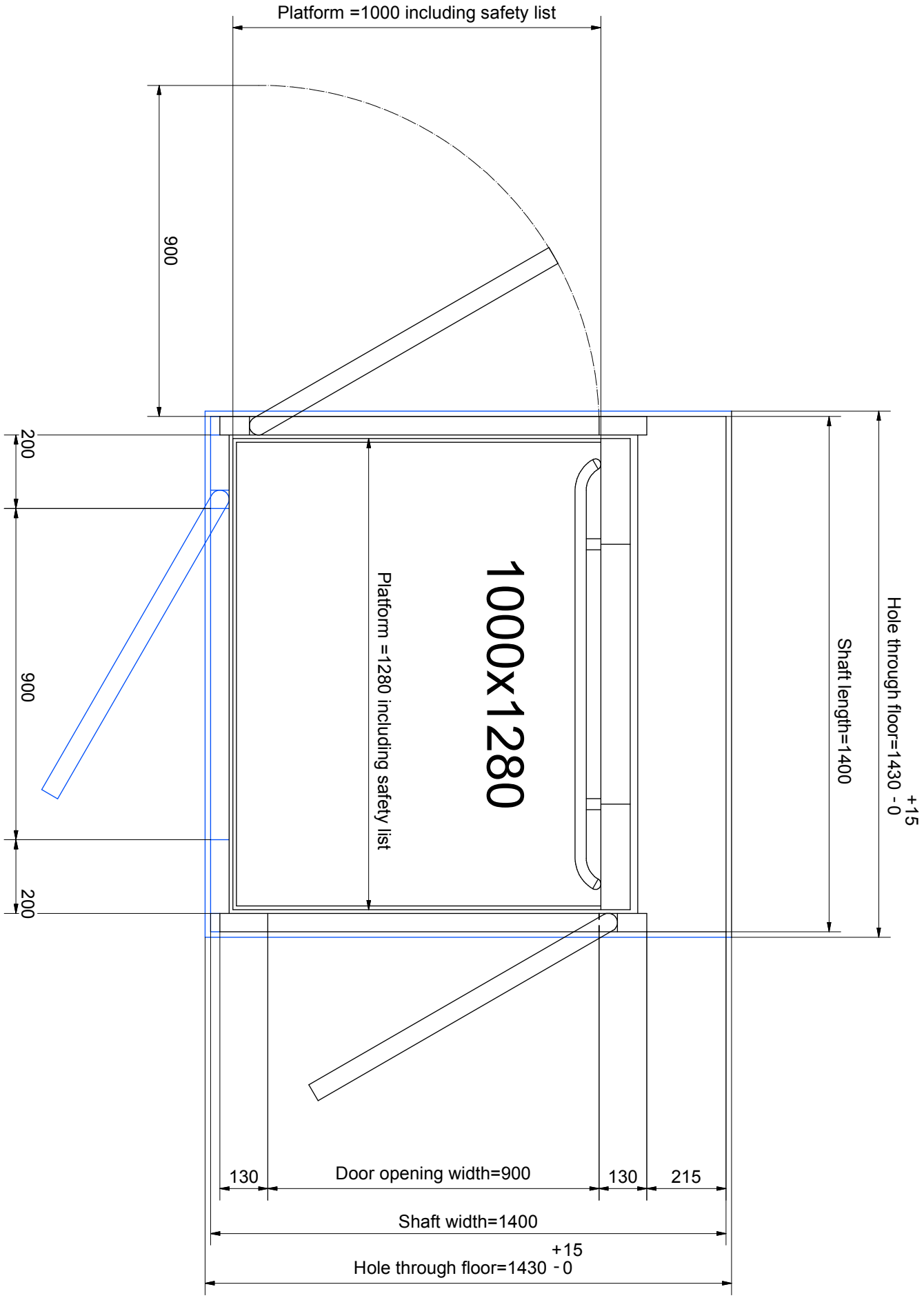
Hole through floor=1430 +15 - 0
Shaft length=1400
1000x1280
Platform =1280 including safety list
Platform =1000 including safety list
200
900
200
900
130
Door opening width=900
130
215
Shaft width=1400
Hole through floor=1430 +15 - 0

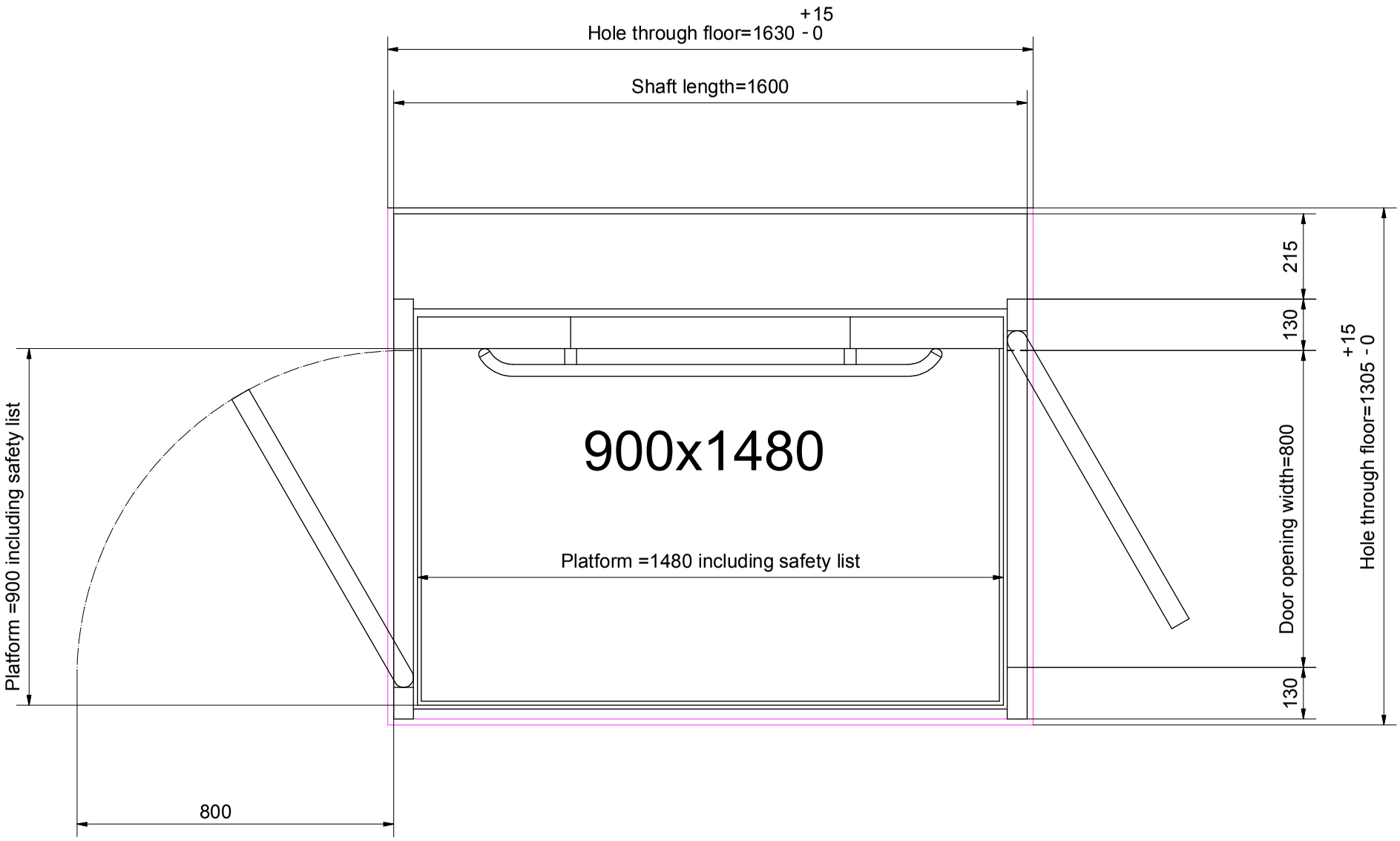
Hole through floor=1630 +15 - 0
Shaft length=1600
215
130
Hole through floor=1305 +15 - 0
900x1480
Platform =900 including safety list
Platform =1480 including safety list
Door opening width=800
130
800

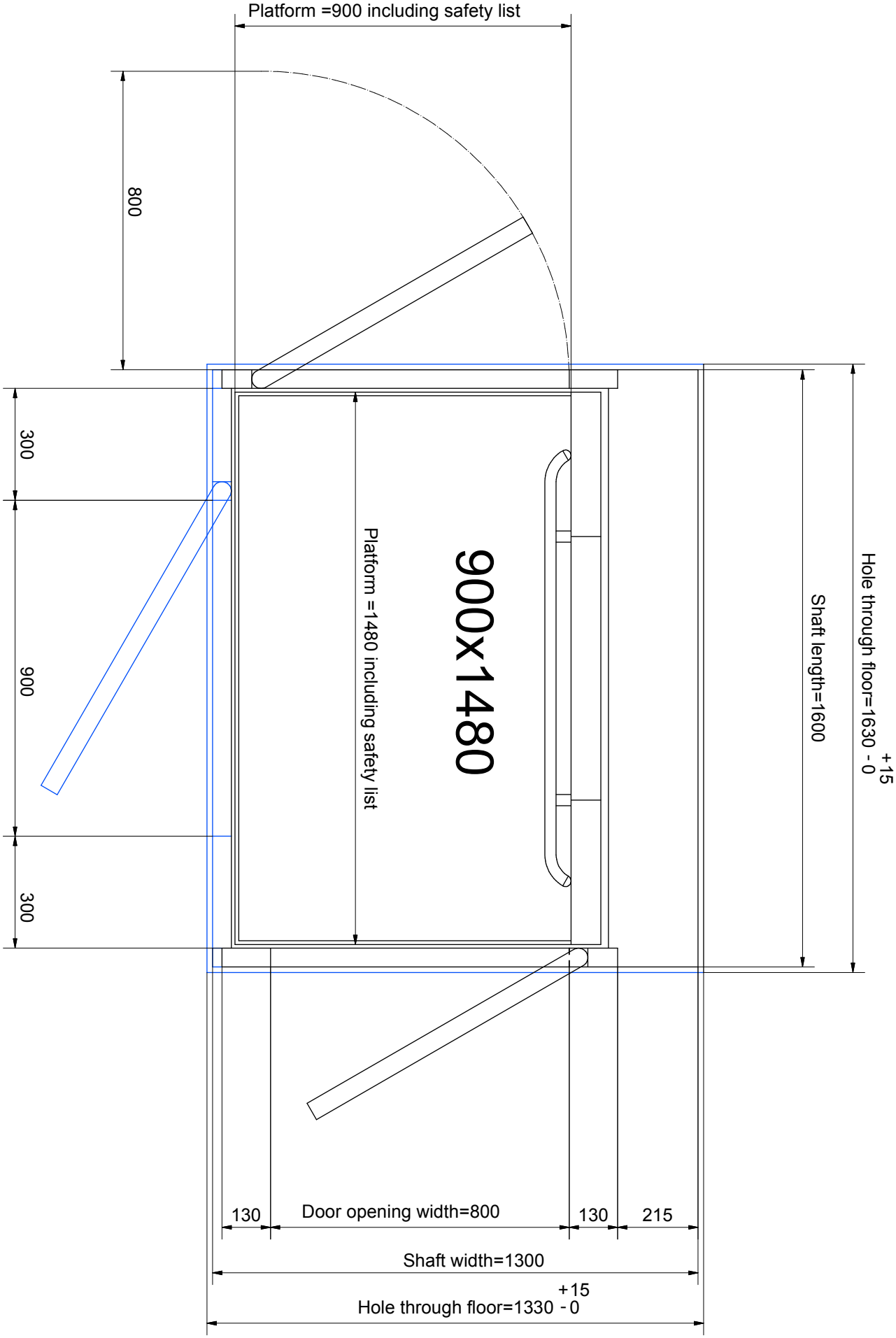
Hole through floor=1630 +15 - 0
Shaft length=1600
900x1480
Platform =1480 including safety list
Platform =900 including safety list
800
300
900
300
130
Door opening width=800
130
215
Shaft width=1300
Hole through floor=1330 +15 - 0

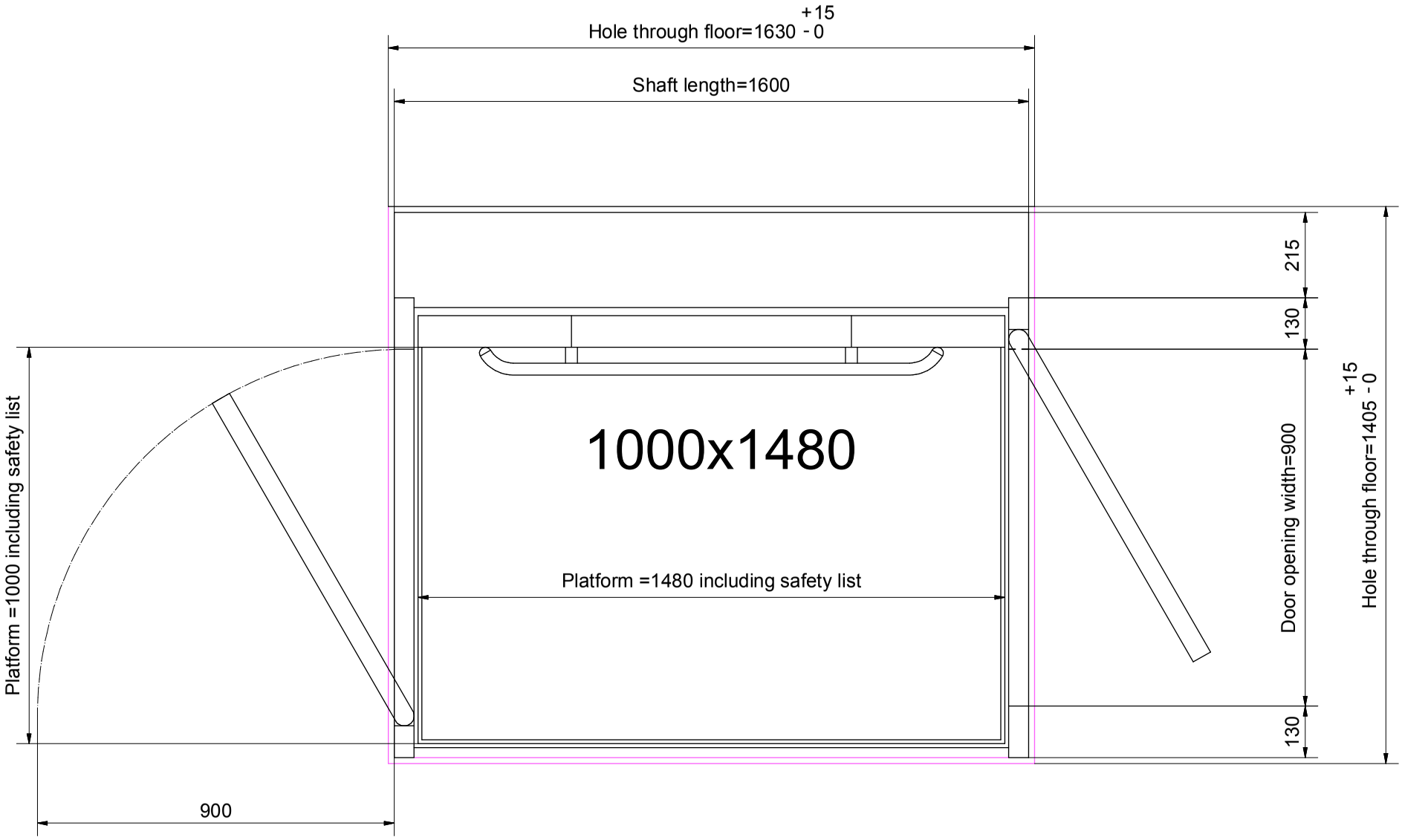
Hole through floor=1630 +15 - 0
Shaft length=1600
215
130
1000x1480
Platform =1000 including safety list
Platform =1480 including safety list
Door opening width=900
Hole through floor=1405 +15 - 0
130
900

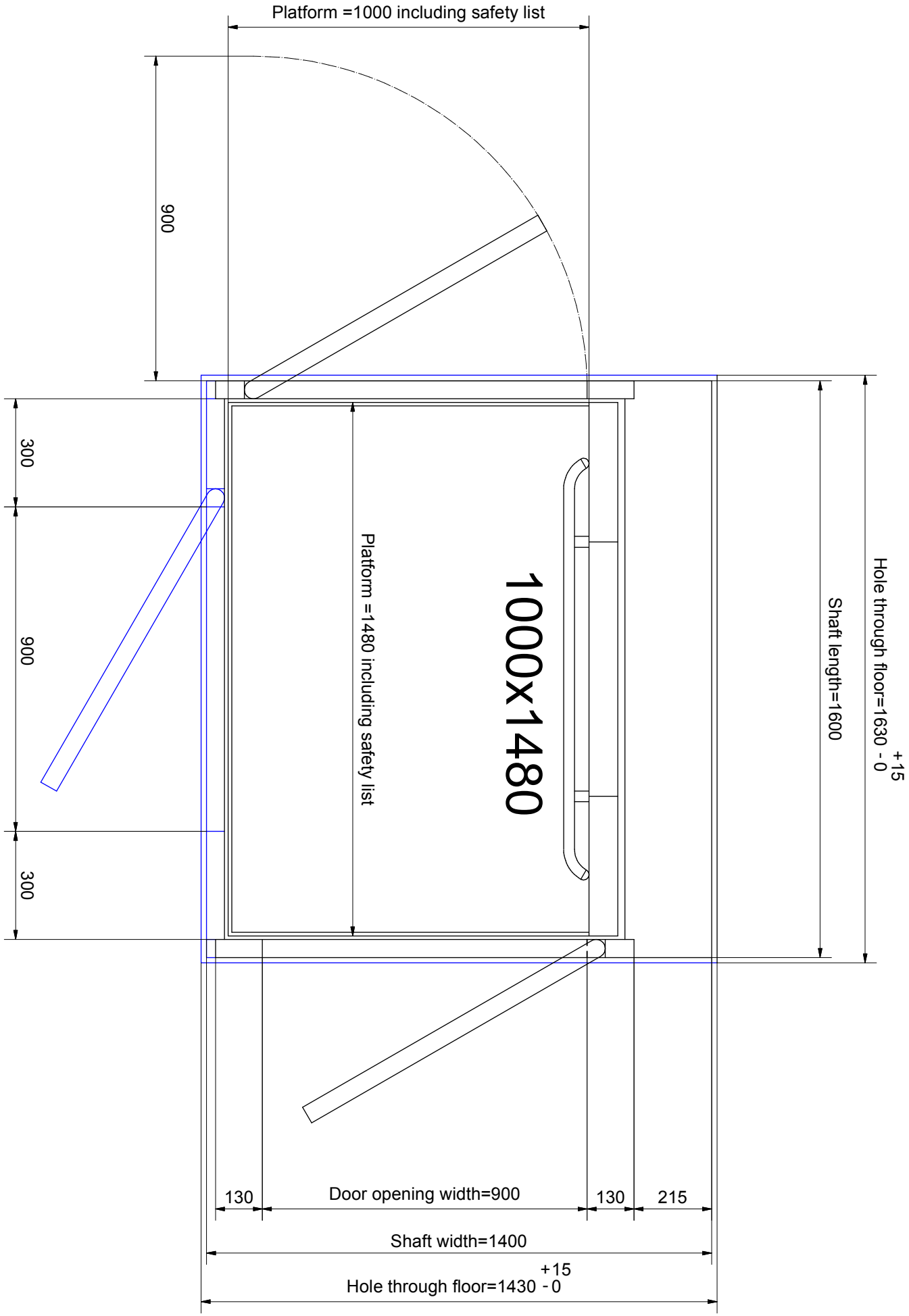
Hole through floor=1630 +15 - 0
Shaft length=1600
1000x1480
Platform =1480 including safety list
Platform =1000 including safety list
900
300
900
300
130
Door opening width=900
130
215
Shaft width=1400
Hole through floor=1430 +15 - 0

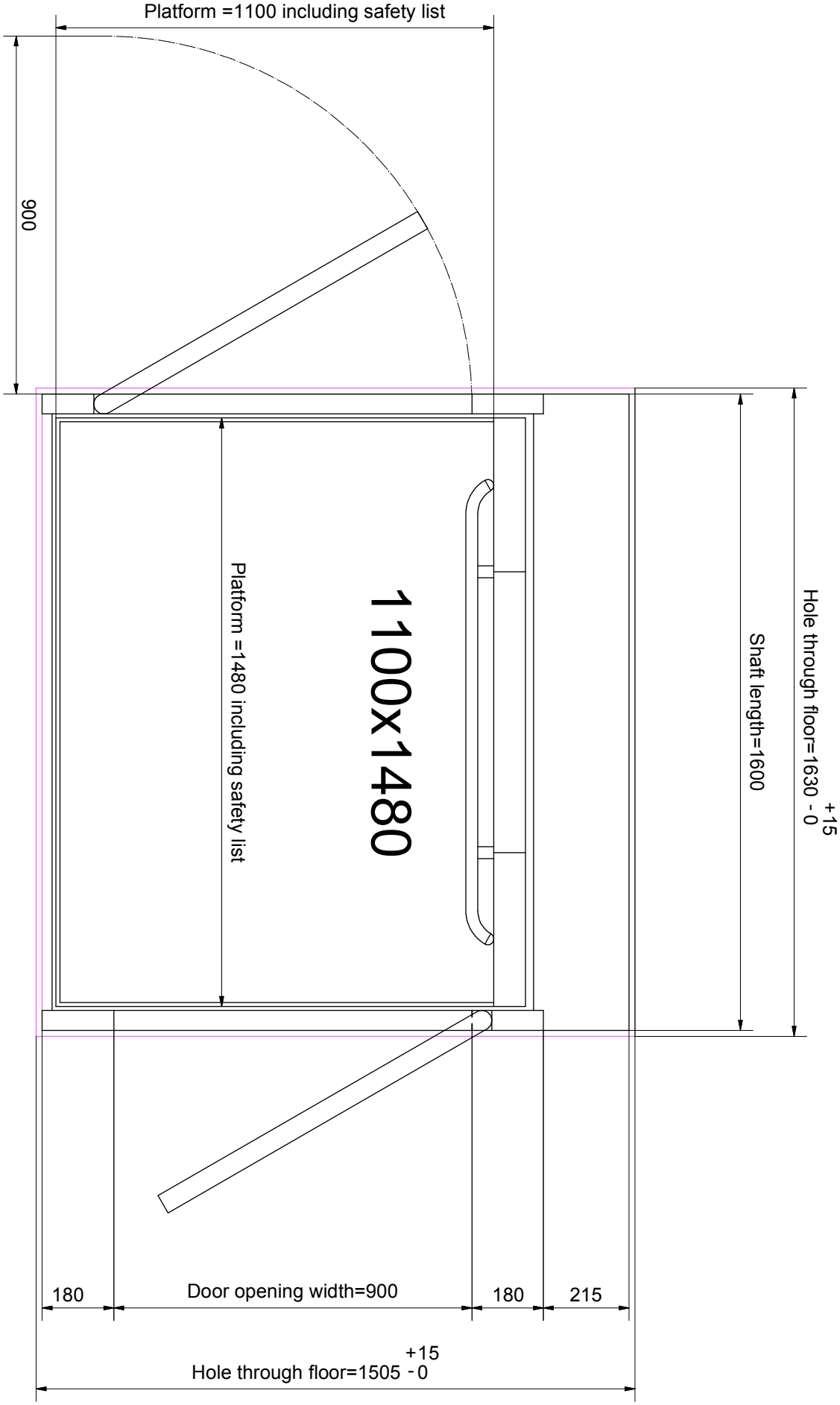
Platform =1100 including safety list
900
1100x1480
Platform =1480 including safety list
Shaft length=1600
Hole through floor=1630 +15 -0
180
Door opening width=900
180
215
Hole through floor=1505 +15 -0

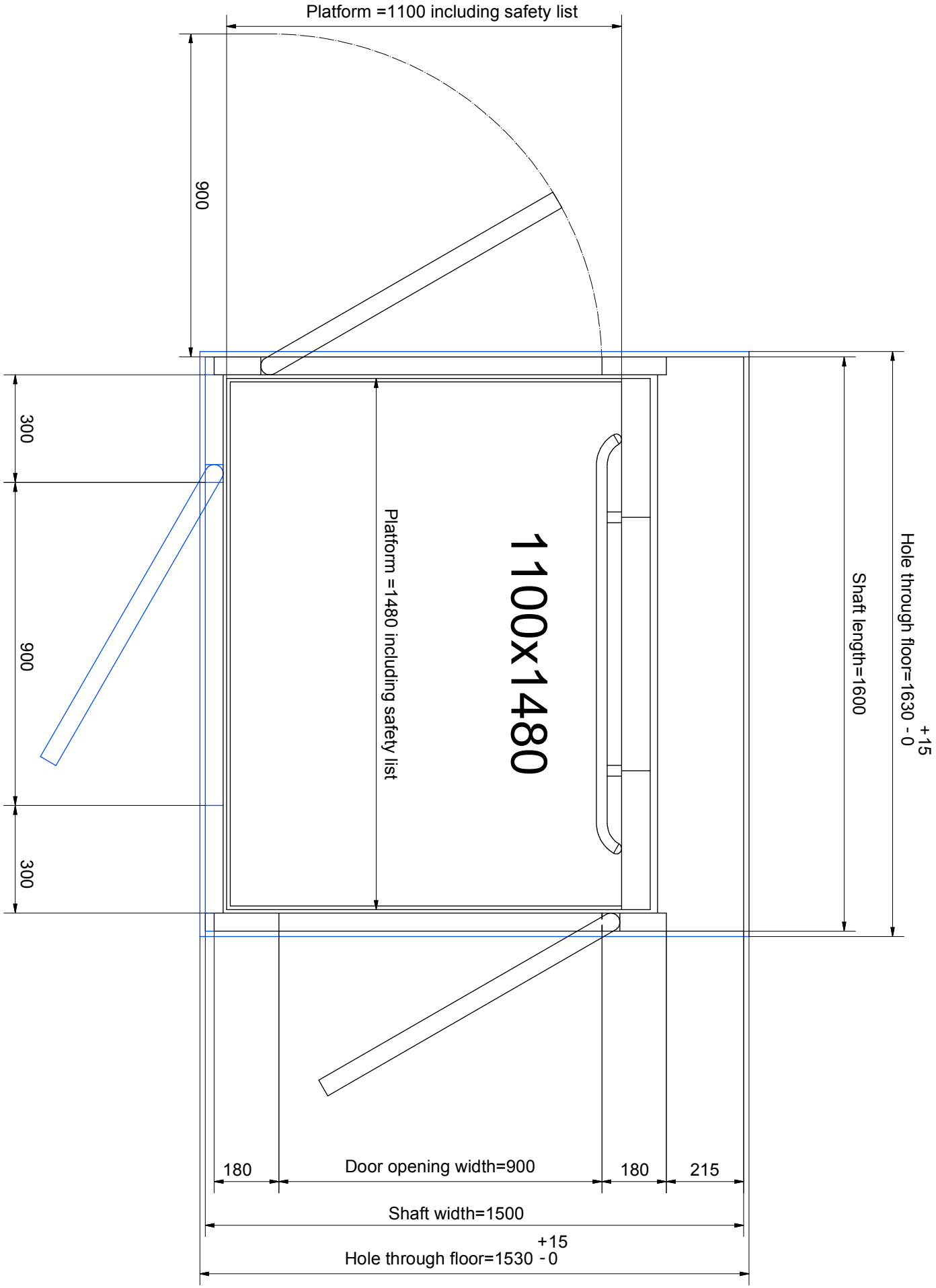
Platform =1100 including safety list
900
300
900
300
1100x1480
Platform =1480 including safety list
Shaft length=1600
Hole through floor=1630 +15 -0
180
Door opening width=900
180
215
Shaft width=1500
Hole through floor=1530 +15 -0

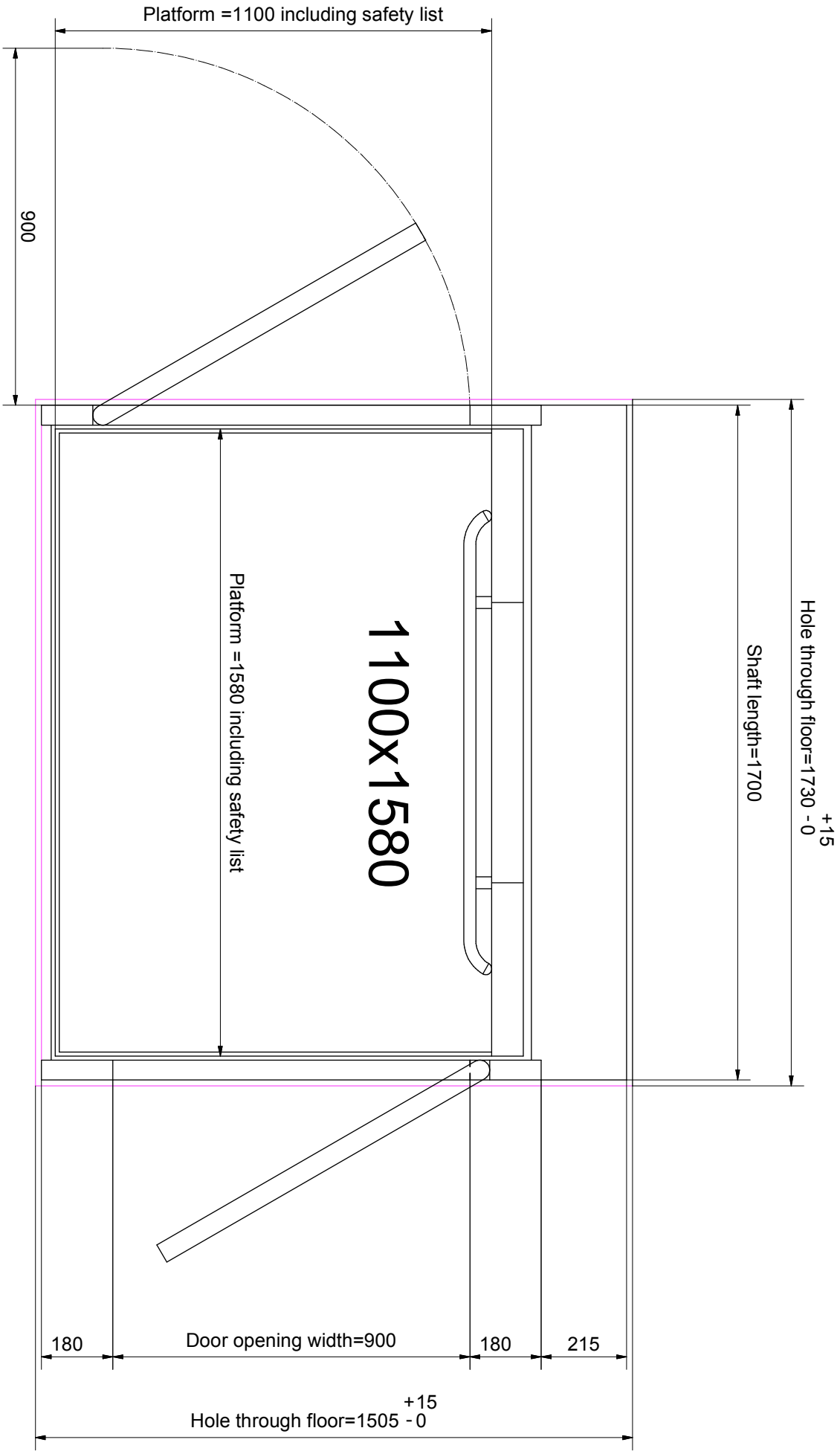
Platform =1100 including safety list
900
1100x1580
Platform =1580 including safety list
Shaft length=1700
Hole through floor=1730 +15 -0
180
Door opening width=900
180
215
Hole through floor=1505 +15 -0

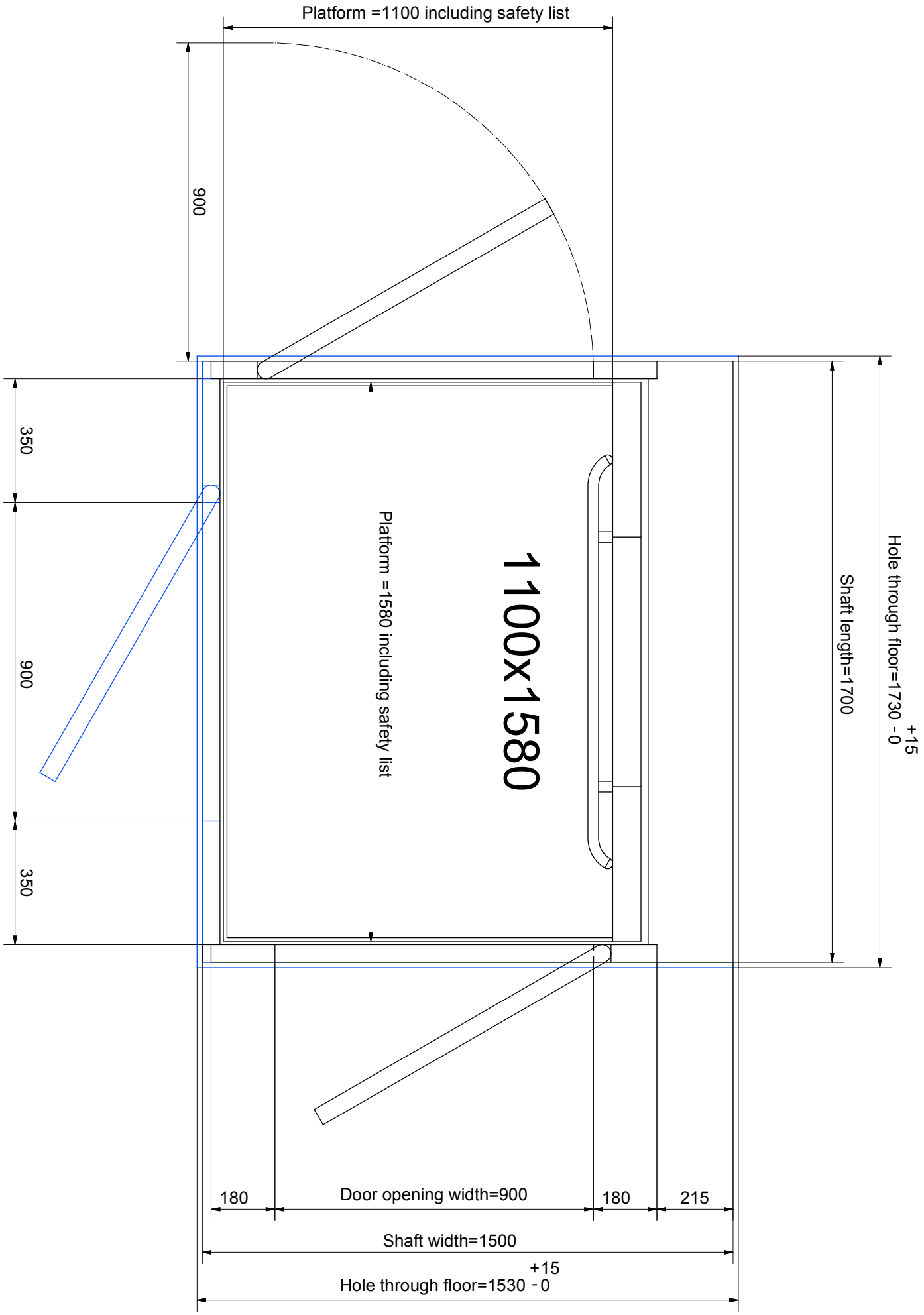
Platform =1100 including safety list
900
350
900
350
Platform =1580 including safety list
1100x1580
Shaft length=1700
Hole through floor=1730 +15 -0
180
Door opening width=900
180
215
Shaft width=1500
Hole through floor=1530 +15 -0

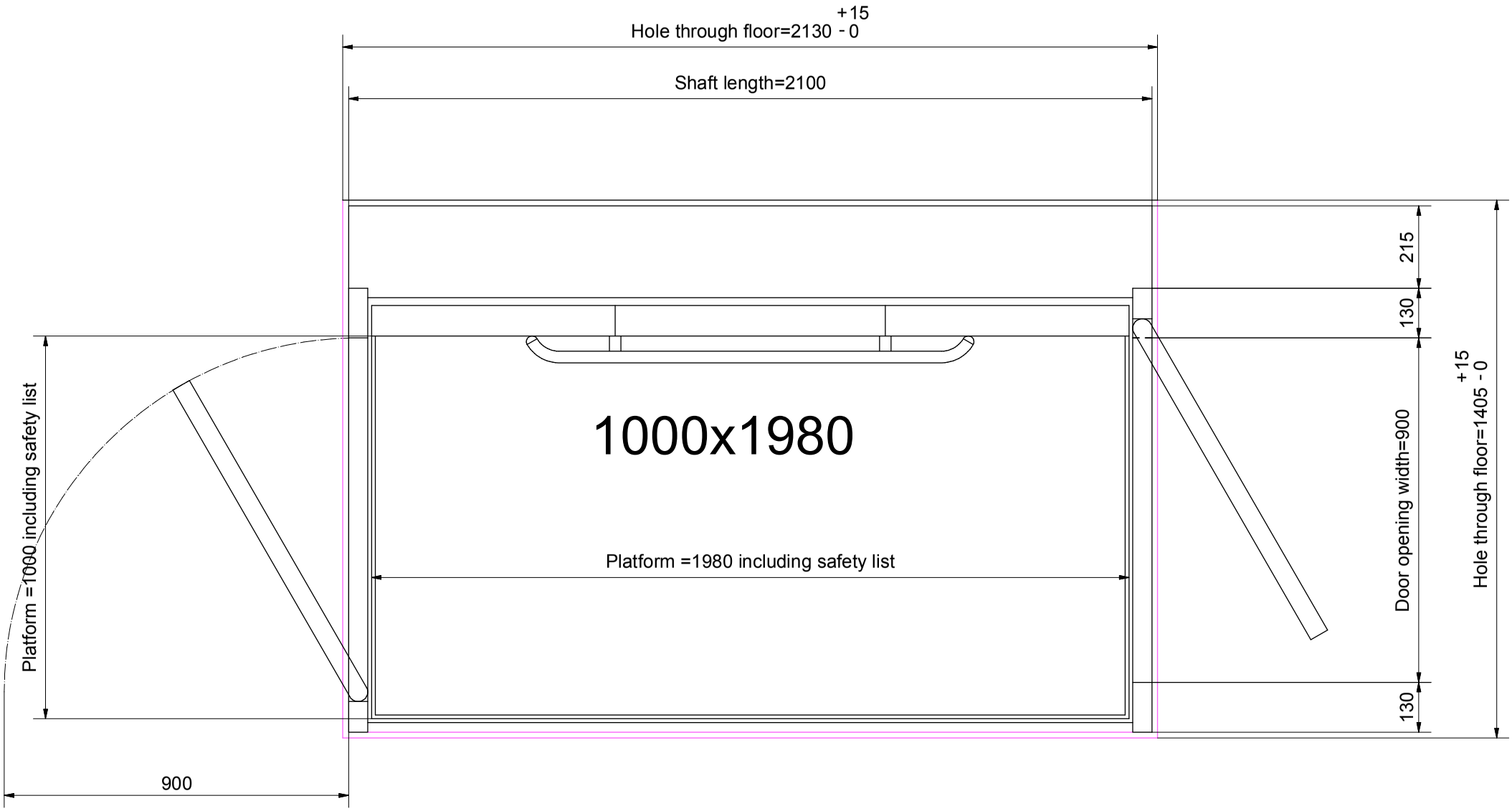
Hole through floor=2130 +15 - 0
Shaft length=2100
215
130
Door opening width=900
130
Hole through floor=1405 +15 - 0
1000x1980
Platform =1980 including safety list
Platform =1000 including safety list
900